BOLYMIN

BG16080A

Feature

1. SMT PCB with metal frame, silver frame
2. Built-in controller T6963C
3. +5V single power supply, with built-in negative voltage
4. 1/80 duty cycle
5. Option: LED, EL B/L
6. Option: Built-in negative voltage

Mechanical Data

Item	Standard Value	Unit
Module Dimension	100.0 x 54.0	mm
Viewing Area	72.3 x 37.8	mm
Dot Size	0.39 x 0.39	mm
Dot Pitch	0.42 x 0.42	mm

Pin Assignment

Pin	Symbol	Function
1	Vee	Negative voltage output(-11V)
2	Vss	Power supply (GND)
3	Vdd	Power supply (+5V)
4	Vo	Contrast adjustment
5	/WR	L: data write
6	/RD	L: data read
7	/CE	Chip enable
8	C/D	Command/data read/white
9	/RES	Reset signal
10~17	DB0~7	Data bus line
18	FS	Font selection(H: 6x8, L:8x8)
19	A	Power supply for B/L (+)
20	K	Power supply for B/L (GND)

Electronic Characteristics

Item	Symbol	Condition	Typical Value	Unit
Input Voltage	Vdd	Vdd = +5V	5.0	V
Supply Current	Idd	Vdd = +5V	42	mA
LCD Driving Voltage	Vdd-Vo	25°C	13.6	V
LED Forward Voltage	Vf	25°C	4.2	V
LED Forward Current	If	25°C	330	mA
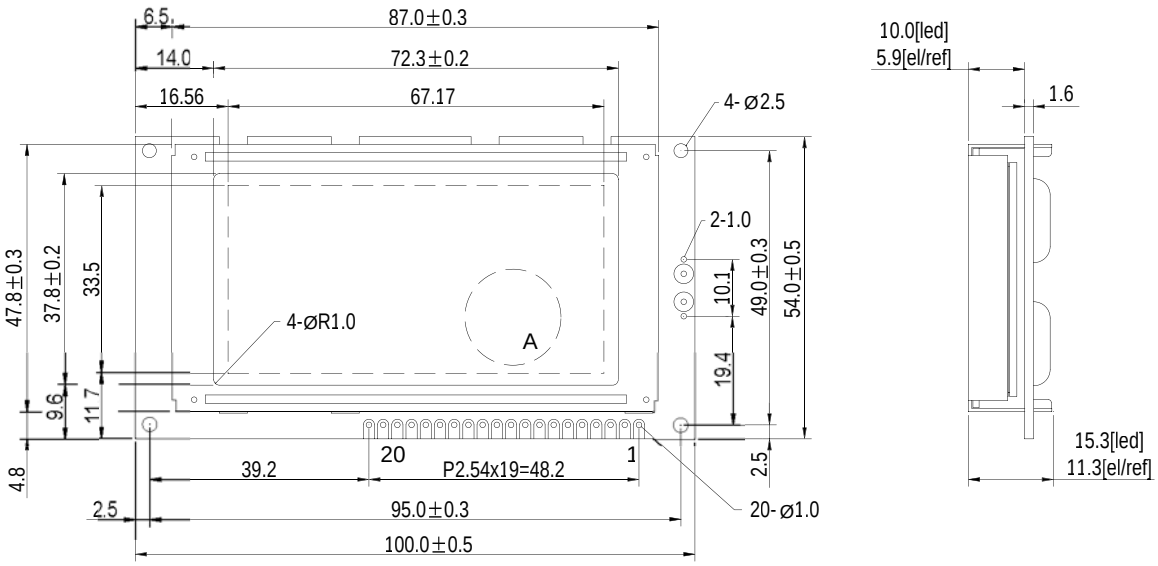
Dimension